Maintenance Guide

SOURCE:
https://support.zortrax.com/m200-plus-maintenance-guide/

Table Of Content

Main
Hotend
Platform
X/Y Axes; Extruder Guide Rails
Extruder
Z-axis

Main

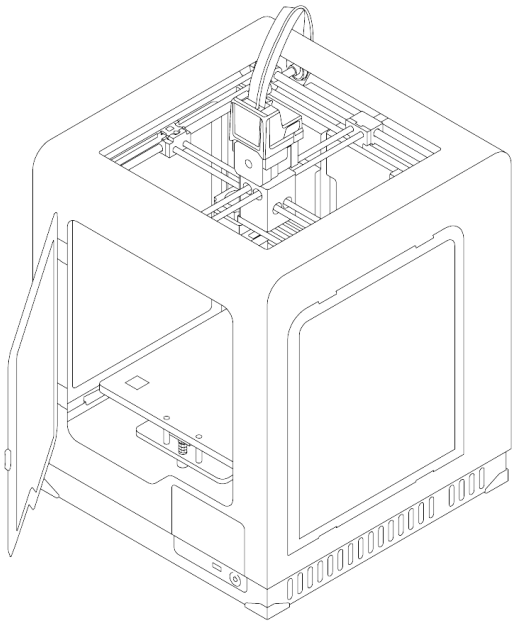

ACTIVITY
Cleaning the machine, its interior and surroundings, especially the bottom plate under the platform

FREQUENCY
Before each printing

Hotend

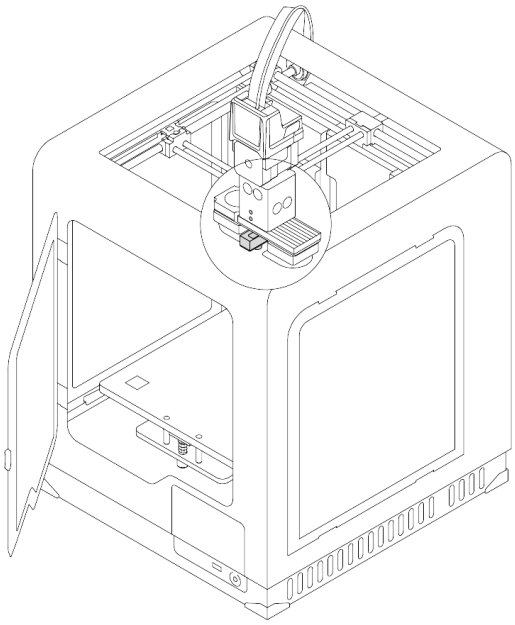

ACTIVITY	FREQUENCY
Checking if the hotend and the nozzle are not clogged and if they are clean from material residues	Before each printing
Cleaning the nozzle	After finishing one spool of material
Checking if the screws that secure the heater and thermocouple are tightened	Every 300 working hours

Platform

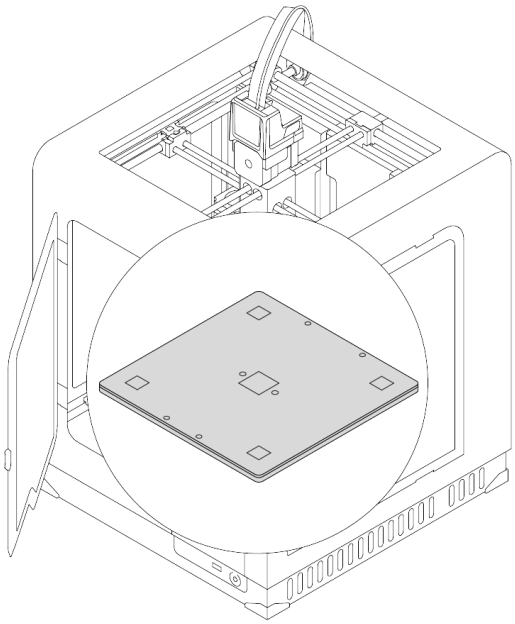

ACTIVITY	FREQUENCY
Cleaning the perforated plate with a spatula	Before each printing
Checking the perforated plate for deformation	Before each printing
Calibration	Every 200 working hours
Checking if the screws next to the platform's small connector are tightened (in the back left corner of the perforated plate)	Every 200 working hours
Cleaning the heatbed and the underside of the perforated plate with a spatula and acetone	Every 300 working hours

X/Y Axes; Extruder Guide Rails

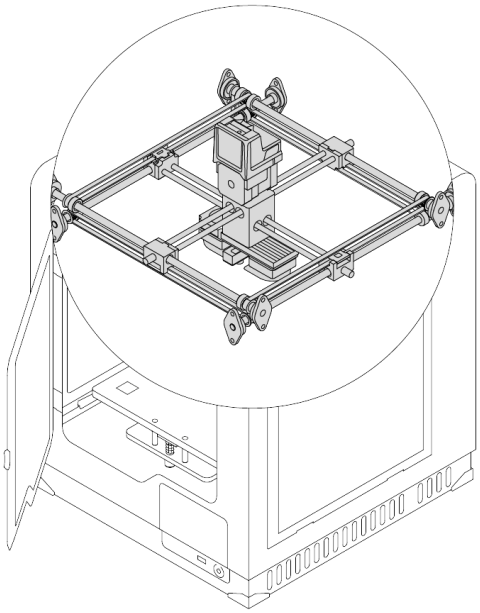

ACTIVITY	FREQUENCY
Checking if the axes and the extruder guide rails are clean from material remains and dust	Before each printing
Checking the tension of the drive belts on the X/Y axes	Every 300 working hours
Checking the tension of the drive belts between the motors and the X/Y axes	Every 300 working hours
Checking if the screws on the X/Y axes and the motors pulleys are tightened	Every 300 working hours
Checking if the extruder moves freely when the printer is off	Every 300 working hours
Lubricating the X/Y axes and the extruder guide rails	Every 400 working hours

Extruder

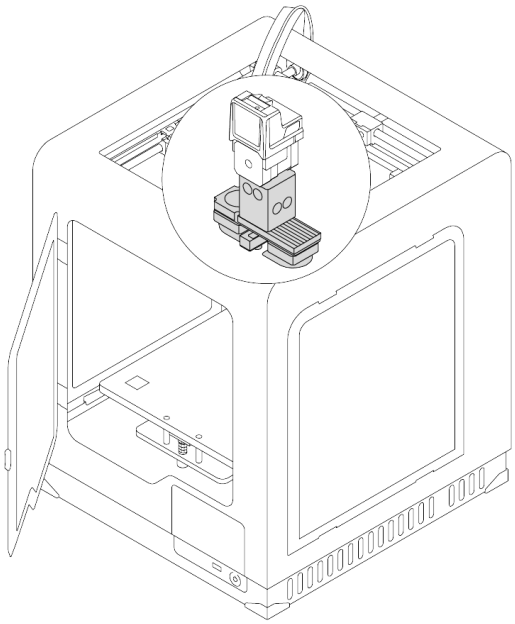

ACTIVITY	FREQUENCY
Checking if the screws that secure the hotend are not loose and, if necessary, tightening them	Every 300 working hours
Removing the material remains and lumps from the extruder	Every 300 working hours
Checking if the fans are working	Every 300 working hours

Z-axis

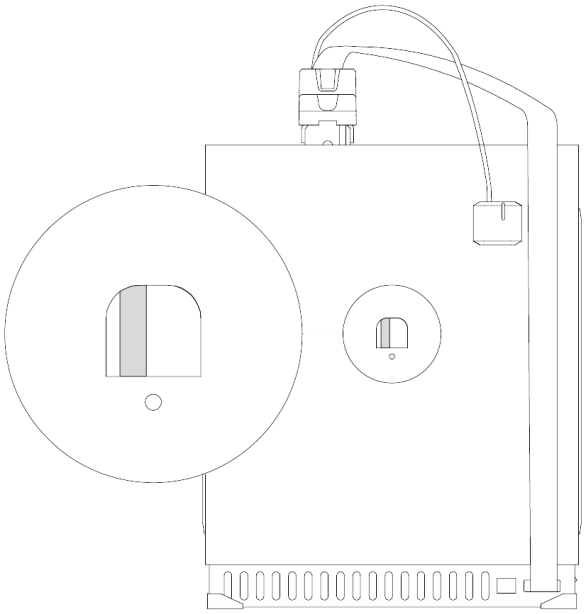

ACTIVITY
Lubricating the Z-axis

FREQUENCY
Every 400 working hours